Waste Heat Recovery from Gas Compressor Reciprocating Engines

Presented to:

Attendees of the PTAC / CETAC-West

"ENERGY MANAGEMENT WORKSHOP"

Presented by:

Victor Juchymenko

January 17, 2007

Agenda

1. Background on GNP and ORC
2. Applications of ORC to oil and gas industry
3. Demonstration project description and stage of development
4. Proposed business model and estimated economics
5. Summary of benefits to producers

Who is Great Northern Power?

Great Northern Power (GNP) is a power developer and a promoter of Organic Rankine Cycle (ORC) technology for small scale (< 5 MWe) power projects, that are fueled by:

1. Recovering industrial waste heat,
2. Combusting waste from oil & gas operations.

What is ORC?

1. Organic Rankine Cycle is a refrigeration cycle running backwards. In place of the J-T valve, an expander is utilized to produce shaft HP.
2. The system utilizes similar propellants to refrigeration cycles (e.g. propane).
3. It can produce mechanical power from any heat source over 95 F.

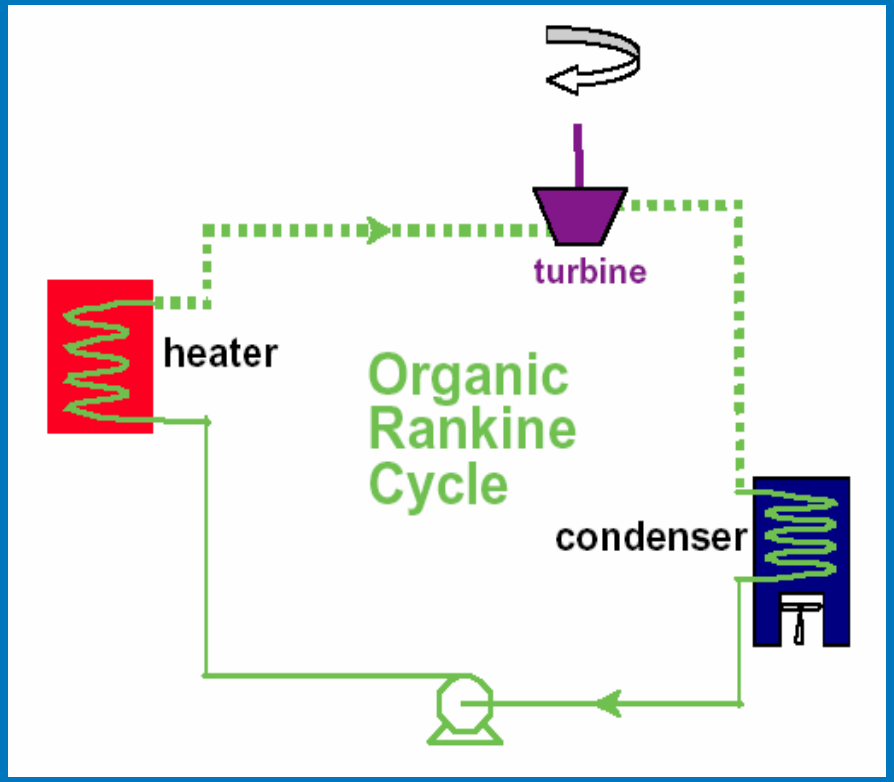

Why ORC?

1. Utilize <u>ANY</u> heat source over 95°C to propel the system
2. Low OpEx
   - Few moving parts → low maintenance costs
   - If heat recovery:
     - NO ADDITIONAL OPERATORS REQUIRED, and
     - NO FUEL COST
3. No water in system, therefore no risk of freezing

What can GNP recover energy from?

Waste Heat Recovery	• Recip engines (exhaust and cooling jacket water) • Turbine engines (exhaust) • Process water over 95 °C
Combustion of Oilfield Waste	• Invert drilling mud • Tank bottom sludge • Flare gas

What has been developed for recip's?

1. GNP has developed a "Plug and Play" system to recover waste heat from recip engines (gas compressors) that are 1,000 HP or larger.
2. They are designed to produce shaft HP suitable for driving a:
    - compressor,
    - generator or
    - pump.

How much energy can be recovered?

	GNP115
Heat source	Jacket water and engine exhaust
Average shaft HP	165 HP
Average net power	115 kW net
Efficiency gain	12 %
Suitable recip engine	1,200 HP and up (900 kW and up)

GNP115 Configuration

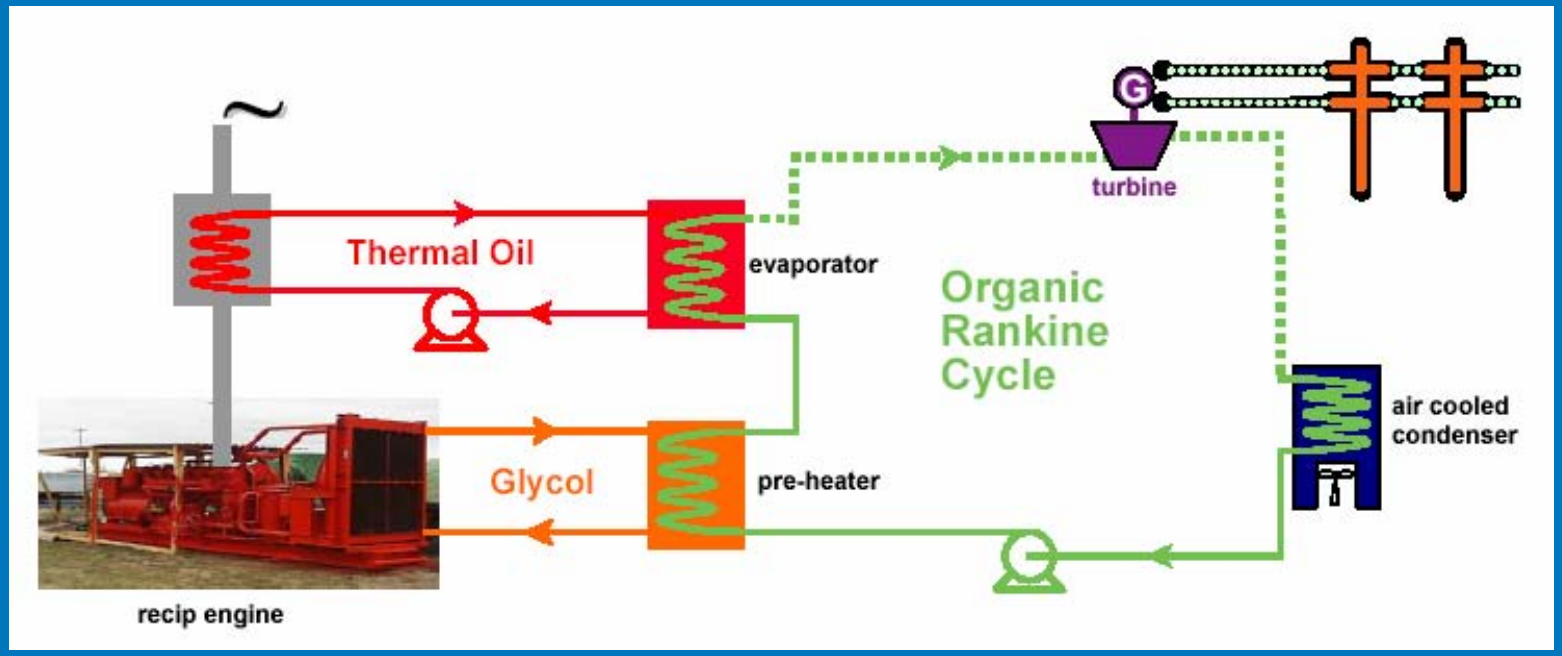

How large is a GNP system?

1. Inside the compressor building, exhaust HX

2. Balance of system is skid mounted (12’ x 40’)

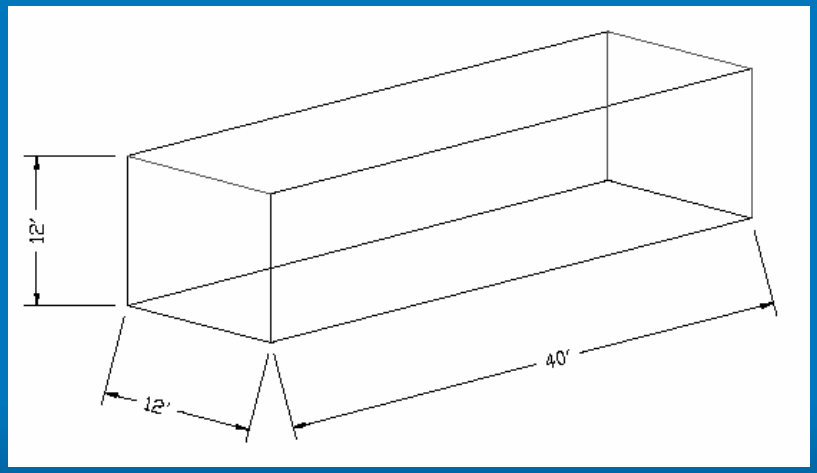

Will GNP-ORC put production at risk?

1. GNP DOES NOT interfere with the producer's production, meaning the compressors recip engine can run with or without the GNP-ORC system operating, with no effect to the recip engine.

Demonstration project description

1. Industry partner: BP
2. Demonstration site selected
3. Project launch anticipated Q1, 2007
4. Demonstration plant expected to be operational in Q3/07

Demonstration project objectives

1. Determine the GNP systems efficiency by measuring the power produced
2. Determine the systems “up-time”

Summary: Benefits to producers

1. Reduce operating costs by creating shaft power to:
   - **Generate electricity at grid connected or remote sites:**
     - elimination of electric delivery charges due to “inside-the-fence” power generation and consumption
     - eliminate “freeze-ups” of the aerial cooler in winter
   - **Compress gas**
   - **Pump liquids**
2. No additional operators required
3. No sales gas consumed (no fuel purchases)
4. Generate emission credits

Thank you.

For more information, contact:

Victor Juchymenko, P.Eng., MBA

(403) 508-2752, or by email at

vj@greatnorthernpower.com